Spicer® Tandem Axles

DANA SPICER®
Drivetrain Products

Illustrated Parts List

AXIP0085a

January 1994

Single Reduction, Dual Range, & Double Reduction
Addendum 461, 462, 463, 521, 581 46,000 - 65,000 lbs

Single Reduction w/Wheel Differential Lock - Forward Axle

DD461-P•DD521-P•DD581-P ---------- 2-6
Differential Lockout Assembly ---------- 7
Pinion Bearing Spacers ---------- 7

Single Reduction w/Wheel Differential Lock - Rear Axle

RD461•RD521•RD581 ---------- 8-9

Shift System

Piston Air Shift Unit ---------- 10-11

Appendix

Carrier Exchange Assemblies ---------- 12
Drive Pinion and Gear Set ---------- 12
Axle Shaft Chart ---------- 13

The following models are represented in this publication

Single Reduction Models w/Wheel Differential Lock

Forward Axle	Rear Axle	Axle Capacity	Gear Size
DD-461-P	RD-461	46,000 lbs	18" Gear
DD-521-P	RD-521	52,000 lbs	18" Gear
DD-581-P	RD-581	58,000 lbs	18" Gear

Model Identification

Using Model Designation to Identify Axle Components

- The Axle Model Identification number contains information that is important to understand when purchasing service parts or new components. The Model identification number provides important vehicle, capacity and application information and model features. Use this guideline to understand your Axle Model Identification. If you need assistance, contact your Dana representative.

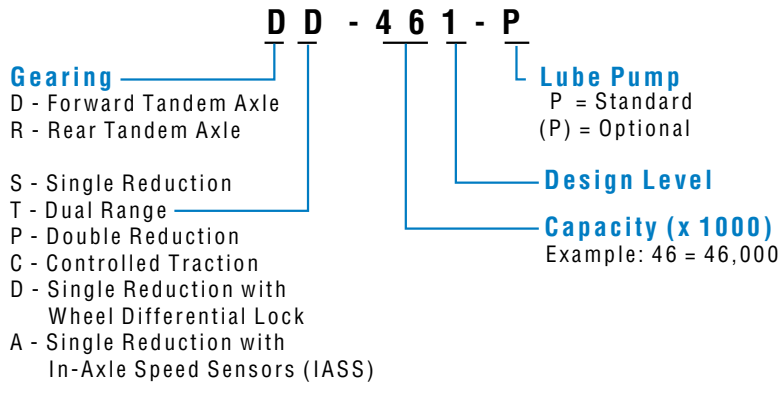

Forward Axle

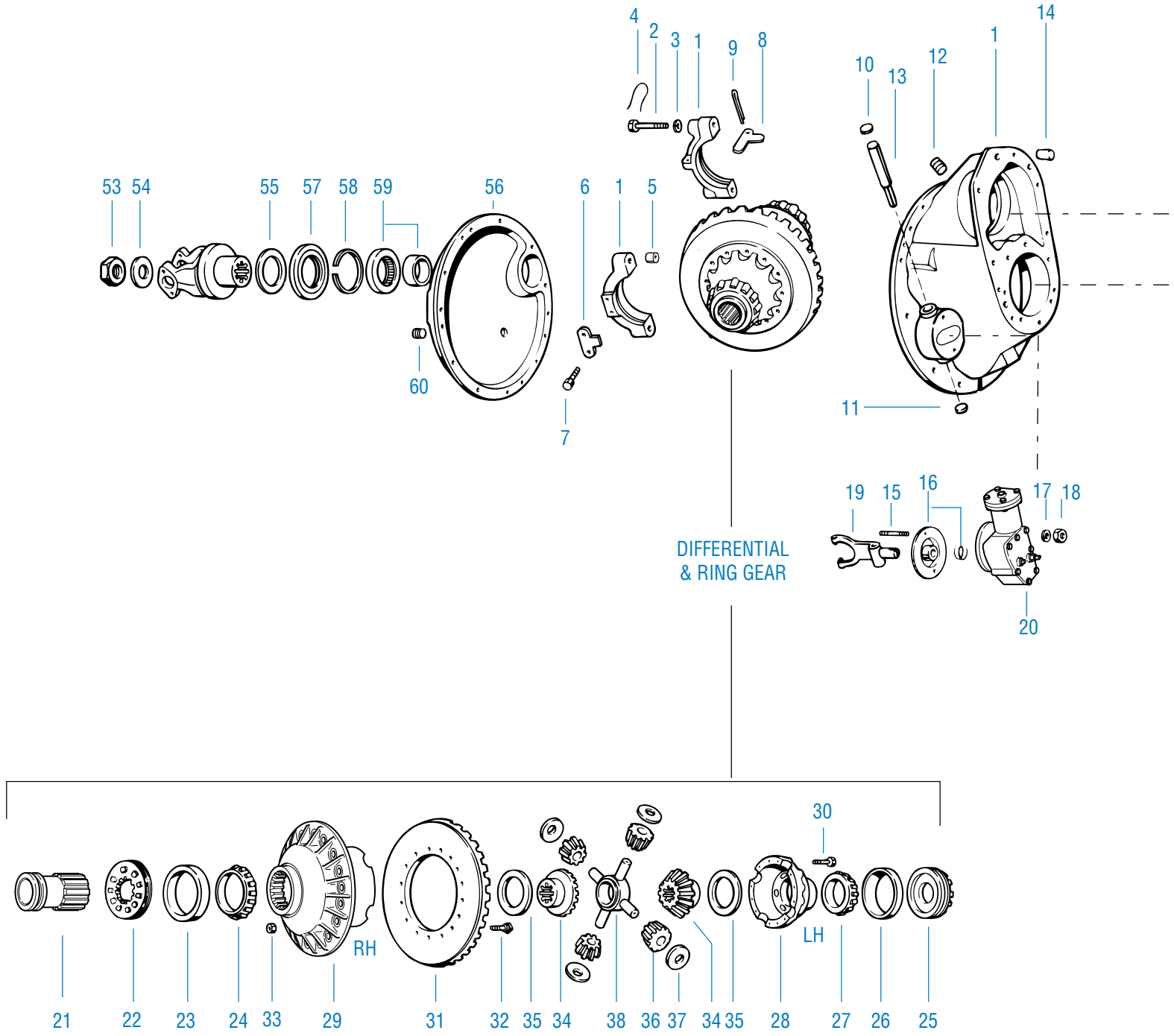

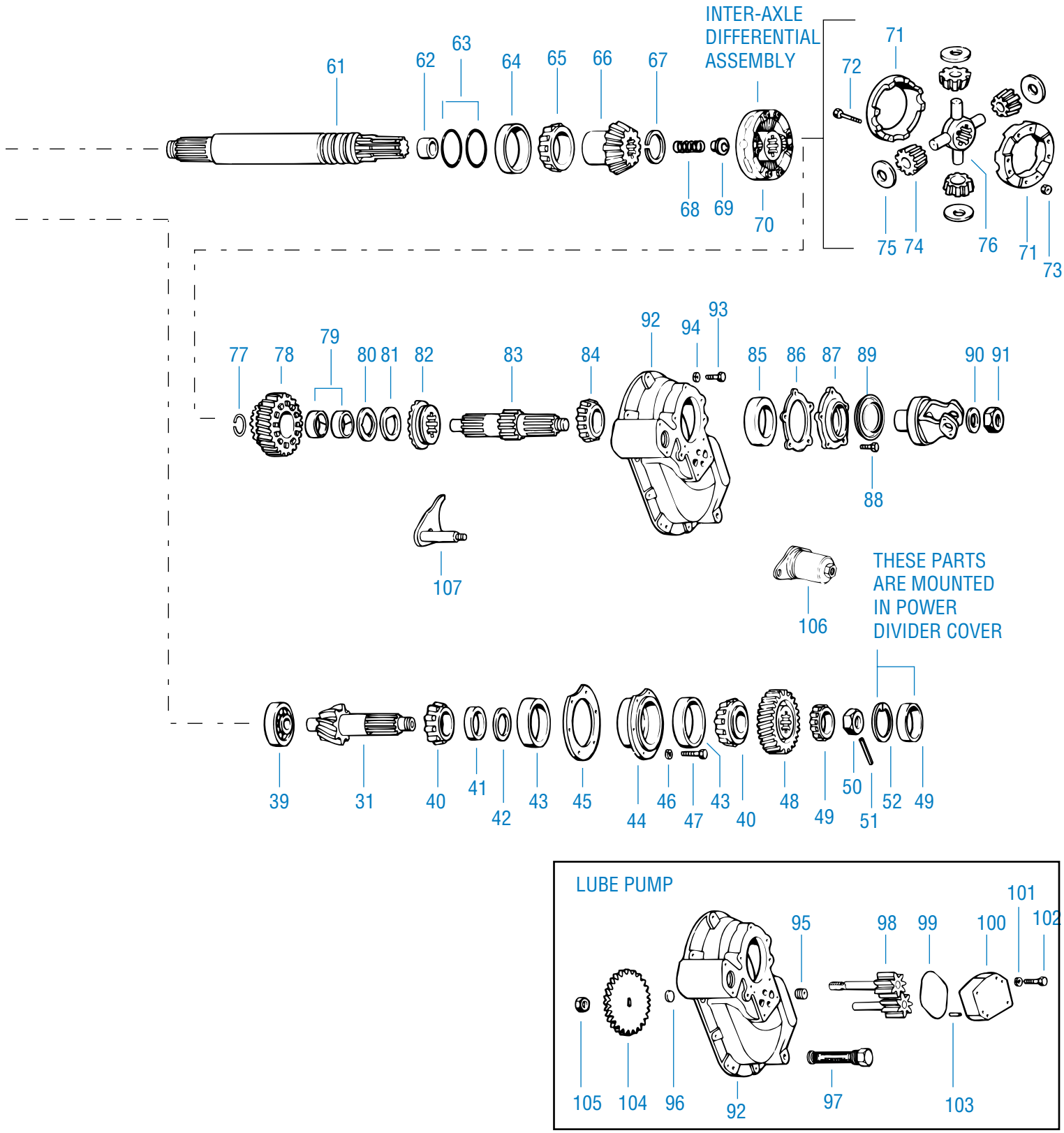
INTER-AXLE
DIFFERENTIAL
ASSEMBLY
61
62
63
64
65
66
67
68
69
70
71
72
73
74
75
76
77
78
79
80
81
82
83
84
85
86
87
88
89
90
91
92
93
94
107
106
THESE PARTS
ARE MOUNTED
IN POWER
DIVIDER COVER
39
31
40
41
42
43
45
44
46
47
43
40
48
49
50
51
52
49
LUBE PUMP
95
96
97
98
99
100
101
102
103
104
105
92

Forward Axle

Item	Description	Qty	Order Part No.	Notes
	BASIC OVERHAUL KIT	1	217621	Contents Identified with *
1	DIFF CARRIER & BRG CAP KIT	1	106710	Includes Items: 2-5, 10-18
	Carrier Casting No. 110500 -NSS			45521 cover plate & 107276 RTV
2	Bearing Cap Screw	4	32732	
3	Flat Washer	4	32912	
4	Lockwire	4	12563	
5	Dowel Bushing	2	32730	
6	Brg Cap Adjuster Lock (RH)	1	45448	
7	Capscrew	2	210601	
8	Brg Cap Ajuster Lock (LH)	1	14275	
9	Cotter Pin (LH)	1	90876	
10	Expansion Plug (Upper)	1	30703*	
11	Expansion Plug (Lower)	1	9797*	
12	Filler Plug	1	90325	3/4"
13	SHIFT FORK SHAFT ASSY	1	113801	Includes 113140 O-Ring
	Shaft# 41103 -NSS			
14	Carrier Cover Dowel Pin	2	7641	
15	Shift Unit Mounting Stud	2	119863	
16	Shift Fork Seal & Spring Assy	1	119855	
17	Flat Washer	2	119857	
18	Stud Nut	2	63028	
19	Shift Fork & Roller Assy	1	84508	
20	Shift Unit Assy	1		See: Piston Air Shift Unit, Pg 10-11
21	Sliding Clutch	1	935088	
22	Diff Brg Adjuster (RH)	1	82451	
23	Diff Brg Cup (RH)	1	21632*	
24	Diff Brg Cone (RH)	1	102660*	
25	Diff Brg Adjuster (LH)	1	21637	
26	Diff Brg Cup (LH)	1	15092*	
27	Diff Brg Cone (LH)	1	27876*	
	WHEEL DIFF CASE KITS	1		
	Ratios 3.55-4.11		217619	Includes Items 28-30
	Ratios 4.33-6.67		217620	
28	Diff Case (Plain Half) NSS	1	86777-NSS	
29	Diff Case (Flanged Half) NSS	1	128980-NSS	Ratios 3.55-4.11
			128981-NSS	Ratios 4.33-6.67
30	Diff Case Capscrew	12	88503	
31	Ring Gear & Drive Pinion Set	1		See: Gear & Pinion Listing, Pg 12
32	Bolt	16	67586	In kit 70745
33	Nut	16	60600	In kit 70745
	WHEEL DIFF SIDE GEAR KIT		114472	Includes Items 34-38
	WHEEL DIFF KIT w/o SIDE GEARS		118749	Includes Items 35-38
34	Diff Side Gear - 36 Involute	2	93401	
35	Side Gear Thrust Washer	2	27274*	
36	Side Pinion	4	86780	
37	Side Pinion Thrust Washer	4	86781*	
38	Spider	1	86778	

Item	Description	Qty	Order Part No.	Notes
39	Pinion Pilot Brg	1	126187*	
40	Pinion Brg Cone	2	14218*	
41	Pinion Brg Spacer Washer	1	78904*	
42	Pinion Brg Spacer	AR		See: Pinion Brg Spacer Chart, Pg 7
43	Pinion Brg Cup	2	14217*	
44	PINION BRG CAGE & CUP ASSY	1	78914	Includes Item 43
	Cage # 78932 -NSS			
45	Pinion Brg Cage Shim	AR		
	.003"		45461*	
	.005"		62829*	
	.010"		45462*	
	.020"		62830*	
	.030"		45463*	
46	Lockwasher	6	37207	
47	Bearing Cage Capscrew	6	62158	
48	Pinion Helical Gear	1	119995	
49	Outer Pinion Support Brg & Race Assy	1	78916*	
50	Pinion Shaft End Nut	1	126182	
51	Pinion Nut Spring Pin	1	118807	
52	Outer Pinion Brg Snap Ring	1	78937*	
53	Output Shaft Nut	1	210508	
54	Output Shaft Washer	1	210509	
55	Rear Brg Retaining Washer	1	78922	
56	AXLE HSG COVER ASSY	1	107863	Includes Items 57-59
	Cover# 84546 -NSS			
57	Output Shaft Oil Seal	1	210737*	Microlip Design
58	Bearing Snap Ring	1	78937*	
59	Output Shaft Brg Assy	1	78936*	Inner Race 118787-NSS
				Outer Race 118788-NSS
60	Magnetic Filler Plug	1	75130	1"
	Filler Plug	1	90898	1/2"
61	OUTPUT SHAFT KIT	1	122419	Includes Items 53-54, 62-63, 67
	Shaft# 119991-NSS 41 SPL, 2.100" dia.			
62	Output Shaft Bushing	1	48922*	
63	Output Shaft O-Ring	2	78931*	
64	Output Shaft Brg Cup	1	24328*	
65	Output Shaft Brg Cone	1	24330*	
66	Output Shaft Side Gear	1	78911	
67	Side Gear Snap Ring	1	85994*	
68	Output Shaft Compression Spring	1	127095	
69	Output Shaft Thrust Bearing	1	51228	
70	INTER-AXLE DIFF ASSY	1	121681	Includes Items 71-76
71	INTER-AXLE DIFF CASE KIT	1	211252	Includes Items 72-73
	Case Half 126151-NSS			
72	Case Bolt	8	57636	
73	Case Nut	8	57637	
74	Side Pinion	4	95218	
75	Side Pinion Thrust Washer	4	126180*	

Forward Axle

Item	Description	Qty	Order Part No.	Notes
77	Helical Side Gear Snap Ring	1	78909*	
78	Helical Side Gear & Bushing Assy	1	113331	Includes Item 79
	Gear# 113328-NSS			
79	Helical Side Gear Bushing	2	75063*	
80	Helical Side Gear Thrust Washer	1	79034*	
81	Helical Side Gear "D" Washer	1	56360*	
82	Lockout Sliding Clutch	1	119948	
83	INPUT SHAFT KIT	1	122418	Includes Item 91
	Shaft# 119990-NSS, 46 SPL, 2.350" dia.			
84	Input Shaft Brg Cone	1	98387*	
85	Input Shaft Brg Cup	1	98388*	
86	Input Bearing Cover Shim	AR		
	.003"		78918*	
	.005"		78919*	
	.010"		78920*	
	.020"		113130*	
87	INPUT BRG COVER ASSY	1	111691	Includes Items 85 & 89
	Cover# 111690-NSS			
88	Bearing Cover Capscrew	5	126243	
89	Input Shaft Oil Seal	1	210736*	Microlip Design
90	Input Shaft Nut Washer	1	126242*	
91	Input Shaft Nut	1	126155	
92	PDU CARRIER COVER ASSY	1	103536	Includes Items 95-96
	Cover# 103526-NSS			
93	Carrier Cover Capscrew	8	90069	Short
		1	9309	Long
		1	81855	Socket Head
94	Lockwasher	10	90417	
95	Pipe Plug	1	90325	
96	Expansion Plug	1	9797	
97	Magnetic Filter Screen	1	102611*	
	LUBE PUMP REPLACEMENT KIT		121302	Includes Items 98-105
98	Pump Gear & Shaft Assy	1	102625	
99	Cover O-Ring	1	102620*	
100	Lube Pump Cover	1	102607	
101	Lockwasher	4	90419	
102	Cover Capscrew	4	102618	
103	Cover Dowel Pin	2	102617	
104	Pump Drive Gear	1	119946	
105	Drive Gear Locknut	1	111451	
106	AIR-OPER. LOCKOUT ASSY	1	123218	See: Differential Lockout Assy, Pg 7
107	SHIFT FORK & PUSH ROD ASSY	1	103529	
108	RTV - Sealant	AR	107276*	

Differential Lockout Assembly

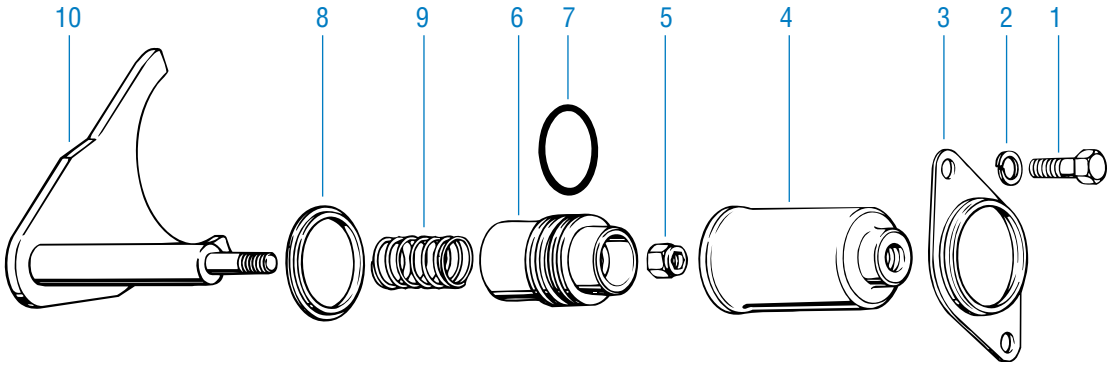

Item	Part Name	Qty	Order Part No.	Remarks
1	Capscrew	2	210381	
2	Lockwasher	2	90415	
3	Mounting Bracket	1	127675	
4	Piston Housing	1	119923	
5	Locknut	1	128160	
6	Piston	1	119912	
7	Piston O-Ring	1	210180	
8	Shoulder Washer	1	210452	
9	Compression Spring	1	31038	
10	Shift Fork & Push Rod Assy	1	103529	
11	RTV Sealant	AR	107276	

Kits And Assemblies

Air-Operated Lockout Assy.	123218	Includes Items 1-10
Air Lockout Repair Kit	211198	Includes Items 5-9
Piston Kit	121333	Includes Items 3-8

Pinion Bearing Spacers

Pinion Bearing Spacer size is equal to thickness in inches. The most commonly used spacers are indicated with an asterix*.

Size"	Part#	Size"	Part#	Size"	Part#	Size"	Part#
.167	91679	.177	91689*	.187	91706*	.197	91722
.168	91680	.178	91690*	.188	91708*	.198	91723*
.169	91681	.179	91691*	.189	91710*	.199	91724
.170	91682	.180	91692*	.190	91712	.200	91725
.171	91683	.181	91694*	.191	91714	.201	91726
.172	91684	.182	91696*	.192	91716	.202	91727
.173	91685	.183	91698*	.193	91718*		
.174	91686	.184	91700*	.194	91719		
.175	91687	.185	91702*	.195	91720*		
.176	91688	.186	91704*	.196	91721		

Rear Axle

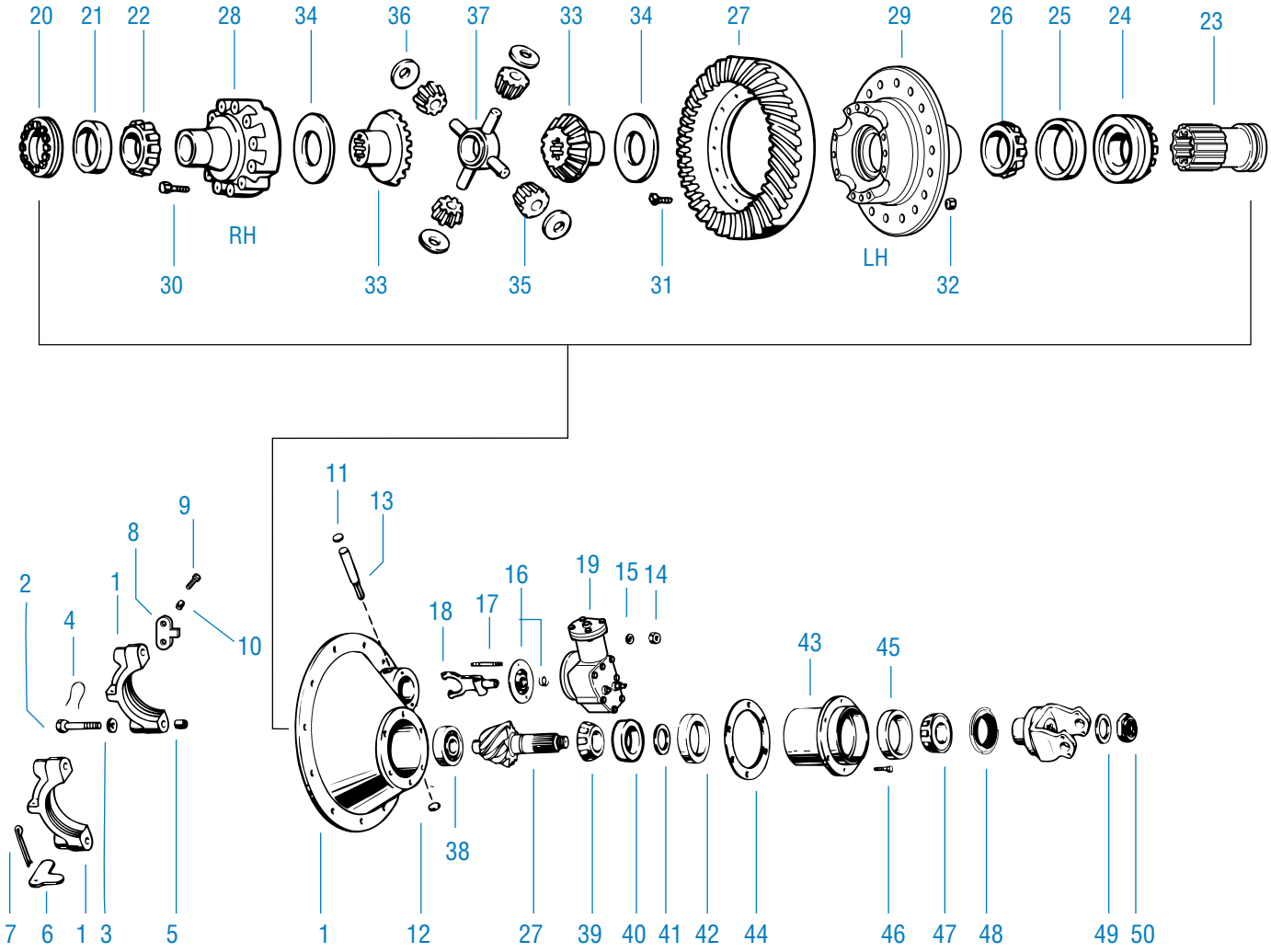

Item	Description	Qty	Order Part No.	Notes
	BASIC OVERHAUL KIT	1	217622	Contents Identified with *
1	DIFF CARRIER & BRG CAP KIT	1	98590	Includes Items: 2-5, 10-17
	Carrier Casting No. 127218R -NSS			45521 cover plate & 107276 RTV
2	Bearing Cap Screw	2	32732	
		2	127180	
3	Flat Washer	4	32912	
4	Lockwire	4	12563	
5	Dowel Bushing	2	32730	
6	Brg Cap Adjuster Lock (RH)	1	14275	
7	Cotter Pin (RH)	1	90876	
8	Brg Cap Ajuster Lock (LH)	1	45448	
9	Adjuster Lock Capscrew	2	210601	
10	Dowel Bushing -Adjuster Lock	2	37746	
11	Expansion Plug (Upper)	1	30703*	
12	Expansion Plug (Lower)	1	9797*	
13	SHIFT FORK SHAFT ASSY	1	113801	Includes 113140 O-Ring
	Shaft# 41103 -NSS			
14	Stud Nut	2	63028	
15	Flat Washer	2	119857	

Item	Description	Qty	Order Part No.	Notes
16	Shift Fork Seal & Spring Assy	1	119855*	
17	Shift Fork Mounting Stud	2	119863	
18	Shift Fork & Roller Assy	1	84508	
19	Shift Unit Assy	1		See: Piston Air Shift Unit, Pg 10-11
20	Diff Brg Adjuster (RH)	1	21637	
21	Diff Brg Cup (RH)	1	15092*	
22	Diff Brg Cone (RH)	1	27876*	
23	Sliding Clutch	1	935088	
24	Diff Brg Adjuster (LH)	1	82451	
25	Diff Brg Cup (LH)	1	21632*	
26	Diff Brg Cone (LH)	1	102660*	
27	Ring Gear & Drive Pinion Set	1		See: Gear & Pinion Listing, Pg 12
	WHEEL DIFF CASE KITS	1		Includes Items 28-30
	Ratios 3.55-4.11		217619	
	Ratios 4.33-6.67		217620	
28	Diff Case (Plain Half) NSS	1	86777-NSS	
29	Diff Case (Flanged Half) NSS	1	128980-NSS	Ratios 3.55-4.11
			128981-NSS	Ratios 4.33-6.67
30	Diff Case Capscrew	12	88503	
31	Bolt	16	67586	In kit 70745
32	Nut	16	60600	In kit 70745
	WHEEL DIFF SIDE GEAR KIT		114472	Includes Items 33-37
	WHEEL DIFF KIT w/o SIDE GEARS		118749	Includes Items 34-37
33	Diff Side Gear - 36 Involute	2	93401	
34	Side Gear Thrust Washer	2	27274*	
35	Side Pinion	4	86780	
36	Side Pinion Thrust Washer	4	86781*	
37	Spider	1	86778	
38	Pinion Pilot Brg	1	126187*	
39	Pinion Brg Cone (Inner)	1	27239*	
40	Pinion Brg Spacer Washer	1	31366*	
41	Pinion Brg Spacer	AR		See: Pinion Brg Spacer Chart, Pg 7
42	Pinion Brg Cup (Inner)	1	27238*	
43	PINION BRG CAGE & CUP ASSY	1	210592	Includes Items 42 & 45
	Cage# 210591-NSS			
44	Pinion Brg Cage Shim	AR		
	.003"		67920*	
	.005"		67921*	
	.010"		67922*	
	.020"		67923*	
	.030"		67924*	
45	Pinion Brg Cup (Outer)	1	14217*	
46	Brg Cage Capscrew	6	113327	
47	Pinion Brg Cone (Outer)	1	14218*	
48	Pinion Oil Seal	1	210724*	Microlip Design
49	Flat Washer	1	210509	
50	Pinion Nut	1	210508	
51	RTV Sealant	AR	107276*	

Piston Air Shift Unit

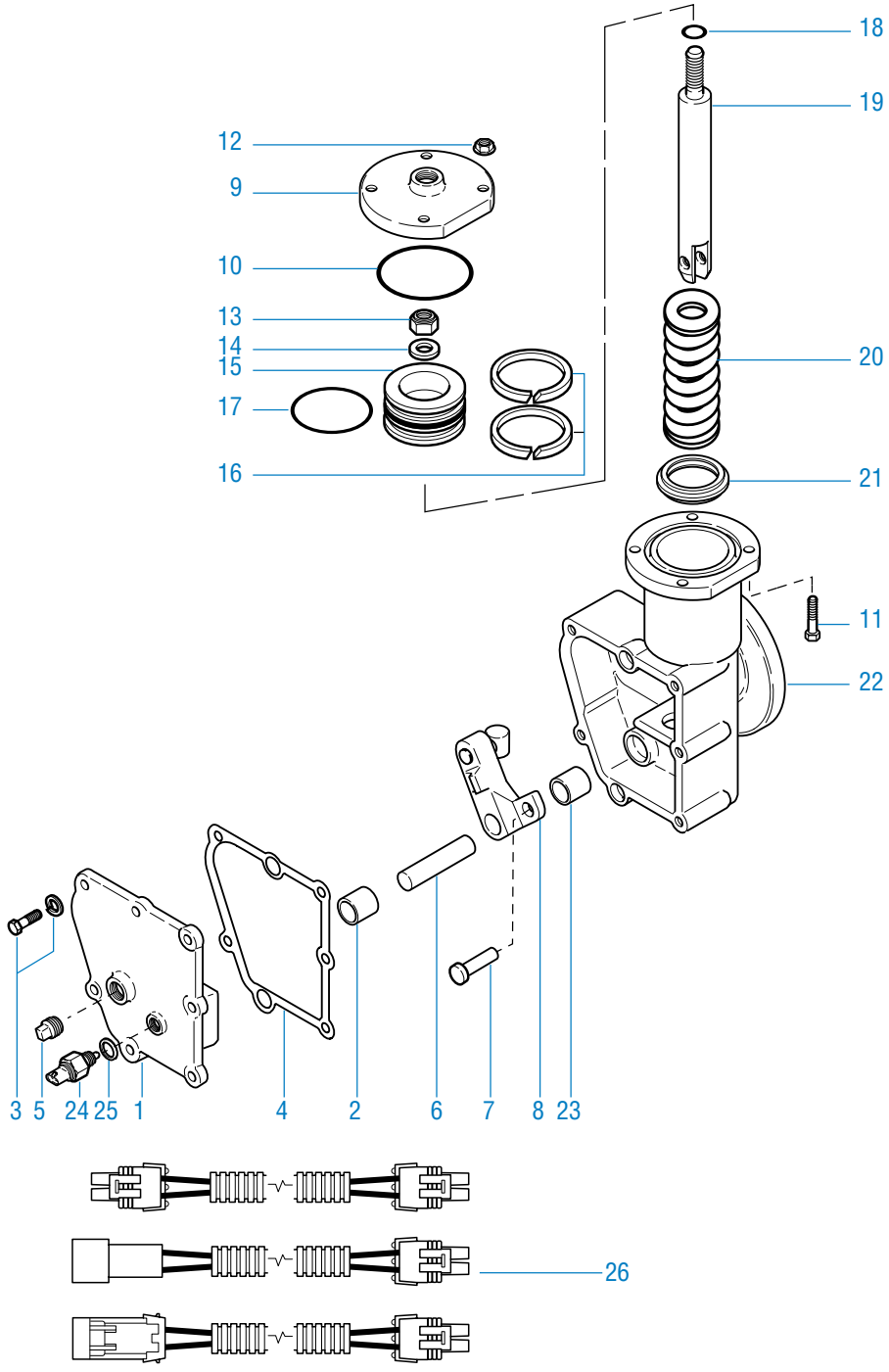

61804-6-94

Piston Air Shift Unit

Item	Description	Qty	Order Part No.	Notes
1	COVER ASSY	1		
	DD Models - cover# 73484 -NSS		129032	Includes Item 2
	RD Models - cover# 73485 -NSS		**129033**	
2	Cover Bearing	1	73481	
3	Screw & Washer Assy	7	88053	Self-Tapping
4	Cover Gasket	1	73488	
5	Cover Plug	1	28325	
6	Actuating Lever Pin	1	73456	
7	Clevis Pin	1	73498	
8	ACTUATING LEVER, PIN & BLOCK ASSY	1		
	DD Models		129025	
	RD Models		129029	
9	Shift Hsg Cover	1	73490	
10	Seal Ring	1	73492	
11	Cover Bolt	4	73491	
12	Lock Nut	4	47641	
13	Lock Nut	1	73496	
14	Washer	1	111406	
15	Piston	1	73493	
16	Felt Piston Oiler (strip)	2	96916	
17	Piston O-Ring	1	32832	
18	Grommet	1	32826	
19	Push Rod	1	73497	
20	Compression Spring	1	73494	
21	Piston Stop	1	73495	
22	HOUSING ASSY	1		Includes Items 3 & 23
	DD Models		82428	
	RD Models		82429	
23	Housing Bearing	1	73481	
24	Switch	1	129035	
25	Nylon Washer	1	129034	
26	Wiring Harness	1	129044	Metri-pack 150 series
			129046	Metri-pack 280 series (Mack Only)
			129047	Weather Pack

Kits And Assemblies

DD Models

Piston Air Shift Unit & Wiring Harness	129068	Incls Items 1-25 & Wiring Harness129044
Piston Air Shift Unit & Wiring Harness	129069	Incls Items 1-25 & Wiring Harness 129046
Piston Air Shift Unit & Wiring Harness	129070	Incls Items 1-25 & Wiring Harness 129047

RD Models

Piston Air Shift Unit & Wiring Harness	129065	Incls Items 1-25 & Wiring Harness 129044
Piston Air Shift Unit & Wiring Harness	129066	Incls Items 1-25 & Wiring Harness 129046
Piston Air Shift Unit & Wiring Harness	129067	Incls Items 1-25 & Wiring Harness 129047

Drive Pinion and Gear Set

Single Reduction - 18" Gearing

Ratios	Forward Axle Models: DD461-P, DD521-P, DD581-P			Rear Axle Models: RD461, RD521, RD581		
	Gear Set	Gear (NSS)	Pinion (NSS) 41,2.100"Dia.	Gear Set	Gear (NSS)	Pinion (NSS) 41,2.100"Dia.
3.55	122667	126678(39)	126679(11)	122668	111349(39)	126677(11)
3.70	122334	98160(37)	126161(10)	121887	88500(37)	126120(10)
3.90	123333	99900(39)	127047(10)	123334	99896(39)	127048(10)
4.11	122335	94381(37)	126162(9)	121888	88502(37)	126121(9)
4.33	122336	78856(39)	126163(9)	121889	52999(39)	126118(9)
4.56	122337	78858(41)	126164(9)	121890	73312(41)	126125(9)
4.88	122338	78860(39)	126165(8)	121891	53001(39)	126119(8)
5.29	211333	127339(37)	127327(7)	211335	127338(37)	127328(7)
5.43	122339	78862(38)	126166(7)	121892	53003(38)	126122(7)
6.17	122340	78864(37)	126167(6)	121893	53005(37)	126123(6)
6.50	212890	128028(39)	128029(6)	212891	128030(39)	128031(6)
6.67	213287	107888(40)	128052(6)	213288	53007(40)	126124(6)

Carrier Exchange Assemblies

These assemblies are complete, less input yoke and shift units.

Single Reduction w/Differential Lock

Gear Ratio 36 Involute	DD461-P DD521-P DD581-P	RD461 RD521 RD581
3.55	675326	675338
3.70	675327	675339
3.90	675328	675340
4.11	675329	675341
4.33	675330	675342
4.56	675331	675343
4.88	675332	675344
5.29	675333	675345
5.43	675334	675346
6.17	675335	675347
6.50	675336	675348
6.67	675337	675349

Axle Shaft Chart

Part No.	Qty	Spline	Body O.D.	Shaft Length	Spline Length	Flange O.D.	Flange Holes	OEM
119903	1	36	2.25	41.25	3.750"	8.375	8 (.948) TPR	4,6,7,9,11
128315	1	36	2.25	41.312	10.236"	8.375	8 (.948) TPR	4,6,7,9,11
119904	1	36	2.25	45.25	3.750"	8.375	8 (.948) TPR	6
129000	1	36	2.25	45.25	10.236"	8.375	8 (.948) TPR	6
126195	1	36	2.25	42.25	3.750"	8.375	8 (.948) TPR	5,6,7,9
128547	1	36	2.25	42.216	10.236"	8.375	8 (.948) TPR	5,6,7,9
126196	1	36	2.25	44.25	3.750"	8.375	8 (.948) TPR	7,9
129002	1	36	2.25	44.25	10.236"	8.375	8 (.948) TPR	7,9
128553	1	36	2.25	40.563	4.000"	8.375	8 (.635) STR	5,6
128549	1	36	2.25	40.563	10.236"	8.375	8 (.635) STR	5,6
126881	1	36	2.25	40	3.750"	8.375	8 (.948) TPR	1
128318	1	36	2.25	40.563	10.236"	8.375	8 (.948) TPR	1
128400	1	36	2.25	41.312	4.000"	8.375	8 (.773) STR	10
128550	1	36	2.25	41.312	10.236"	8.375	8 (.773) STR	10
126973	1	36	2.25	40.563	4.000"	8.375	8 (.773) STR	10
128317	1	36	2.25	40.563	10.236"	8.375	8 (.773) STR	10
126965	1	36	2.25	41.312	4.000"	8.5	8 (.948) TPR	4,5,7,8,9,11
128315	1	36	2.25	41.312	10.236"	8.5	8 (.948) TPR	4,5,7,8,9,11
126967	1	36	2.25	41.312	4.000"	8.5	8 (.635) STR	3,5”
128316	1	36	2.25	41.312	10.236"	8.5	8 (.635) STR	3,5”

1 = Ford
2 = GMC
3 = Freightliner
4 = Mack
5 = Peterbilt
6 = Kenworth
7 = Volvo White
8 = Marmon
9 = Western Star
10 = Navistar
11 = Crane Carrier

For spec'ing or service assistance, call 1-877-777-5360 or visit our website at www.dana.com

Dana Commercial Vehicle Products Group
3939 Technology Drive
Maumee, Ohio, USA 43537

www.dana.com

DANA SPICER® Drivetrain Products

All applications must be approved by the Application Engineering Department. Specifications and/or design are subject to change without notice or obligation.

Printed in USA AXIP-0085a 01/94